ADAE

Your Trust Is Our Success

www.adae.store
ADAE International Dental Store
GuangTangXi road-TianHe district-Guangzhou-China

service@adae.store
Tel: 008618300190504
WhatsApp and Viber available

ADAE VRN-DQ80 Dental Scaler and Air Polisher with Heating

User Manual

CONTENT

Statement 2
1. Product instruction 4
2. Production Installation 9
3. Product Functions and Operations 28
4. Reprocessing 41
5. Troubleshooting 47
6. Storage, Maintenance, Transportation 52
7. Product list 53
8. Warranty 55
9. Symbols 56
10. Product disposal 58
11. Manufacturer's rights 60
12. Electromagnetic compatibility(EMC) 61
13. Attachment 71

Statement

URIT Medical Electronic Co., Ltd. ©ALL RIGHTS RESERVED

Congratulations on becoming a respected customer of URIT Medical Electronic Co., Ltd. and welcome to use the ultrasonic scaler DQ-40/DQ-80 , which will bring you a new experience and convenience. This Operation Manual includes the latest information up to the time of its printing. URIT Medical Electronic Co., Ltd. is solely responsible for the revision and interpretation of simplified English version of this Operation Manual, and reserves the right to make alterations without notice after printing. Some schematic diagrams listed in this Operation Manual are for reference only. If the picture is inconsistent with the real object, the real object shall prevail.

All information stated in this Operation Manual is protected by copyright law. Without the prior written consent of URIT Medical Electronic Co., Ltd. the contents in the Operation Manual shall not be reproduced, copied or translated into other languages in any form.

The use of the product must comply with the requirements of relevant operating procedures and relevant regulations of the medical department, and can only be used by trained doctors or technicians.

The circuit diagrams, parts lists, instructions, calibration instructions and other information provided in the manual can be used by companies or individuals authorized by the company to repair the products.

Please carefully read this Operation Manual before use and properly keep it for future reference. All operations must be carried out in strict accordance with the operating instructions of this Operation Manual.

Otherwise,URIT Medical Electronic Co., Ltd. will not be responsible for any errors and product damage caused by illegal operation.

⚠ Note:

URIT Medical Electronic Co., Ltd. does not promise the products to be used for certain special purposes, or make any implied guarantee for their marketability and applicability;

If any serious incident that has occurred in relation to the device should be reported to the manufacturer and the competent authority of the Member State in which the user and/or patient is established.

If you need the support of after-sales service, please contact URIT Medical Electronic Co., Ltd. or its authorized agent.

1. Product instruction

1.1 Overview

DQ-40/DQ-80 Ultrasonic Scaler has both ultrasound system and air polishing system. It is suitable for scaling,periodontal treatment,air polishing and endodontic irrigating.It has the following features:

- Automatically identify the ultrasonic/air polishing working mode according to the handpiece selection.
- DQ-40 panel adopts intelligent multi-touch to intelligently control the periodontal treatment power of dental cleaning, and adopts imported pressure regulator to accurately adjustment.
- DQ-80 panel adopts seven-inch touch LCD screen for function selection, and the working status is concise .
- In the automatic water supply mode, special chemical solutions such as hydrogen peroxide, sodium hypochlorite and chlorhexidine can be used to improve the clinical treatment effect.
- Detachable scaling handpiece and air polishing handpiece can be sterilized under high temperature of 134℃ and high pressure of 0.22 MPa.
- By employing the wireless foot switch to remotely control the operation of the main unit, the operation is more convenient, and the wired foot switch can be selected according to the needs of the user.
- Soft bright LED light, which not only improves the clinical operation efficiency, but also enables the

commonly used detachable handpiece to have high compatibility.

- The working process is fully automatic controlled by microcomputer, which is convenient and simple to operate and high efficiency.

1.2 Structure and composition

The ultrasonic scaler is composed of function control circuit, liquid circuit, air circuit, powder, powder chamber,handpiece, nozzle, tips, wrench, power adapter and foot switch (wired or wireless).

1.3 Intended use

This device is a piezo-operated ultrasonic device for use in dental applications. It is mainly used for the treatment of periodontal defects. In addition, the device is used in the area of prophylaxis, peri-implantitis treatment as well as dental hygiene.

Intended patient population: Adults and pediatrics patients with periodontal disease and peri-implantitis.

Pediatrics: Age levels ranged from 12 to 18 years.

Intended user: Trained dentist.

Place of use: Professional dental clinics and hospitals.

1.4 Contraindications

- Patients with cardiac pacemakers
- Patients with gingival malignant tumor

- Patients with active angina pectoris, myocardial infarction within six months, and uncontrolled hypertension and heart failure
- Patients with local oral inflammation in the acute phase (except acute necrotizing gingivitis)
- Patients with bleeding diseases
- Patients with acute infectious diseases
- Pregnant
- Patients suffering from chronic bronchitis or asthma must not, under any circumstances, be treated with air polishing handpiece. The jet of air and powder could cause respiratory difficulties.

1.5 Main technical specifications

- Input Voltage: 230 V～,50 Hz
- Supply Voltage: 24V～,1.3A（DQ-40） 25V～,2.8A（DQ-80）
- Input Power: 35 VA（DQ-40） 100VA（DQ-80）
- Wireless foot switch battery: AA batteries x 2
- Tip amplitude: Minimum: 1 μm; deviation -50%. Maximum: 100 μm; deviation +50%
- Output half-excursion force: Minimum: 0.1 N; deviation -50%. Maximum: 5 N; deviation +50%
- Tip vibrating frequency: 25 kHz ~ 35 kHz
- Tip output power: 3 W～20 W
- Compressed air supply: 5 bar～6 bar（0.5 MPa～0.6 MPa）

- Water temperature of air polishing system: 0℃～45℃
- Fuse: T2AH250V (DQ-40)　　T5AH250V (DQ-80)
- Fuse of Power Supply:T1AH250V
- Weight of Main Unit: 2.1 kg（DQ-40） 2.43kg（DQ-80）
- Net Weight: 5kg（DQ-40） 6.5kg (DQ-80)
- Weight of Power Supply: 0.9kg (DQ-40)　　2.0kg（DQ-80）
- Dimension of Main uni(H×M×D):310mm×370mm×170mm(DQ-40)
  310mm×370mm×200mm(DQ-80)
- Receiving Sensitivity: -114 dB(in accordance with China National Telecommunication Law), Receiving frequency: 2.412 GHz-2.462 GHz
- Software Version: V1
- Operating mode: continuous operation
- Type of protection against electric shock: Class II equipment
- Degree of protection against electric shock:Type B applied part
- Degree of protection against ingress of water: main unit (IPX0), wired foot switch (IPX1), wireless foot switch(IPX4)
- Degree of safety of application in the presence of a Flammable Anesthetic Mixture with air, Oxygen or Nitrous Oxide: devices of Non-AP, APG type equipment.

- Wireless foot switch:

Transmission frequency: 2.412 GHz-2.462 GHz

Modulation type: GFSK

Bandwidth:4MHz

Max. radiation power：10 dbm

Radio Frequency Interface Requirements-Related to European installation

Note: This equipment has been tested and found to comply with the limits for a EN 300 440 v2.1.1 receiver Category 3.

These limits are designed to provide reasonable protection against harmful interference in a residential installation.

When placed in the vicinity of other device(s) radiating in the 2.4GHz ISM band this device will inadvertency trigger on.

Please take appropriate measure to mitigate this eventuality.

1.6 Working environment

a. Ambient temperature: 5℃～40℃
b. Relative humidity: ≤80%
c. Atmospheric pressure: 70kPa～106kPa
d. Temperature of Cooling liquid: 5℃～25℃

1.7 Side effects, adverse events and measures

If any unexpected action occurs to the device when it is used, please cut off the power switch of the device immediately to stop the device to ensure safety. Pay attention to that the tip needs enough water to dissipate heat when using device, otherwise it may be burns. Please stop using the device immediately and make corresponding diagnosis and treatment in case of burns.

2. Production Installation

2.1 Main Unit Front & Rear Schematic Diagram of DQ-40

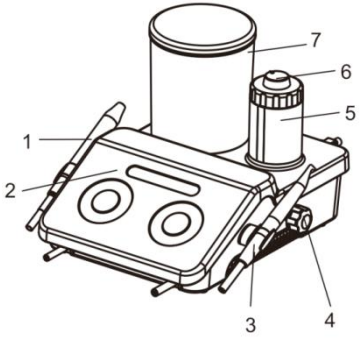

Figure 1 Front Schematic Diagram

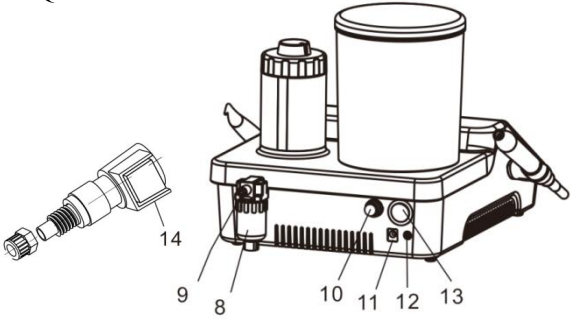

Figure 2 Rear Schematic Diagram

1、Scaling handpiece

2、Operation panel

3、Air polishing handpiece

4、Air pressure setting: set the air pressure under air polishing mode

5、Powder chamber

6、Powder flow setting

7、Water bottle

8、Air/Water separator

9、Air supply intake

10、Fuse

11、DC electric socket

12、Wired foot switch socket

13、Power switch

14、Quick connector

2.2 Operation Panel of DQ-40

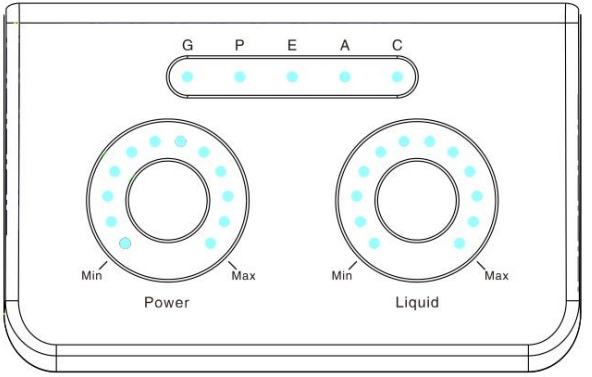

Figure 3 Operation Panel of Main unit

a) Power: power setting, under the scaling mode: slide for setting power;

under the air polishing mode: slide for setting air pressure.

b) Liquid: water flow rate setting

c) Mode selection:

G: Scaling treatment P: Periodontal treatment E: Endodontics irrigation A:Air polishing treatment

C: Air circuit cleaning

2.3 Main Unit Front & Rear Schematic Diagram of DQ-80

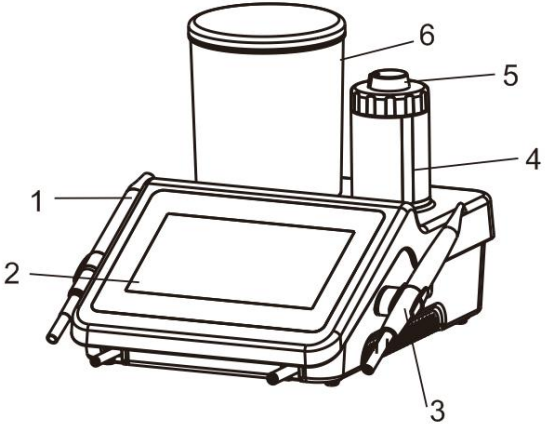

Figure 4 Front Schematic Diagram

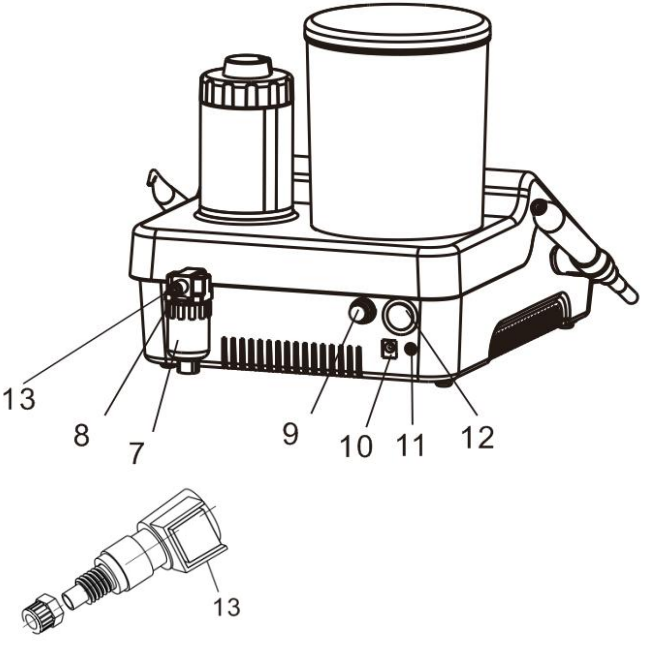

Figure 5 Rear Schematic Diagram

1、Scaling handpiece

2、Display screen

3、Air polishing handpiece

4、Powder chamber

5、Powder flow setting

6、Water bottle

7、Air/Water separator

8、Air supply intake

9、Fuse

10、DC electric socket

11、Wired foot switch socket

12、Power switch

13、Quick connector

2.4 Display screen (DQ-80)

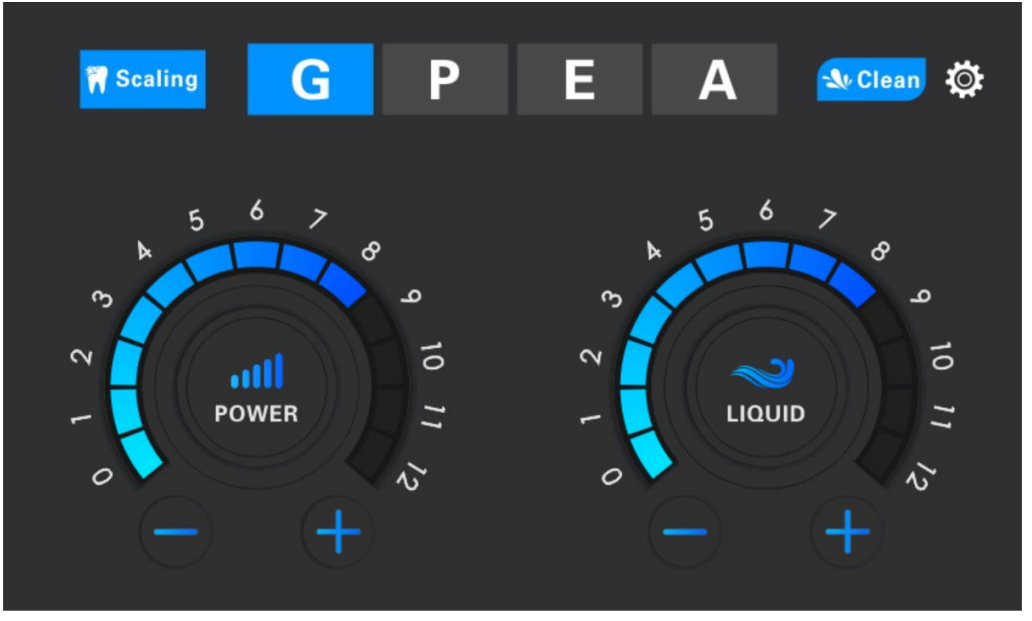

Figure 6 Ultrasonic system interface

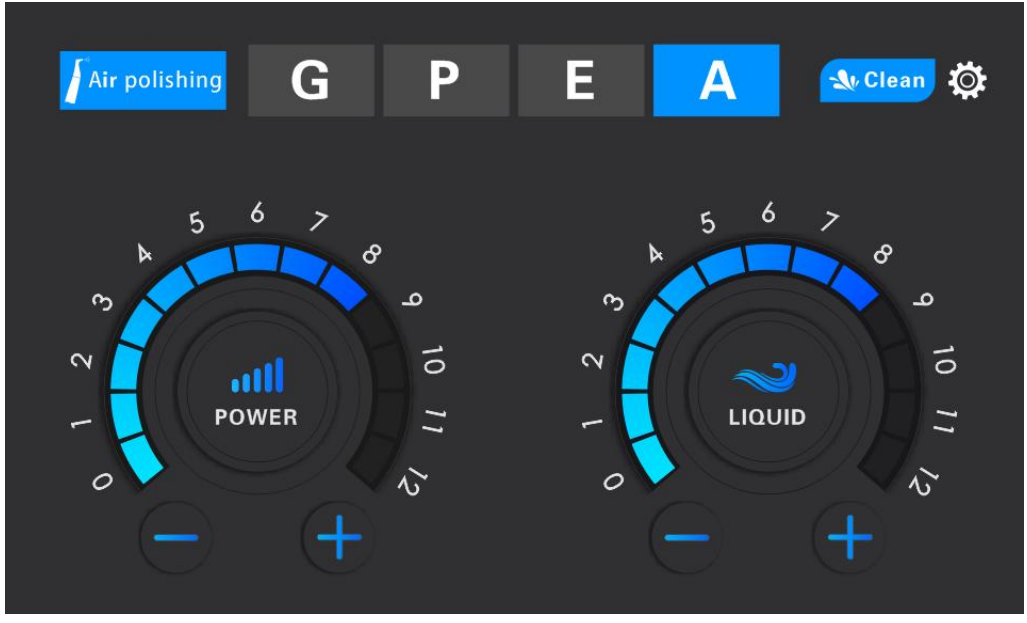

Figure 7 Air polishing system interface

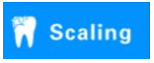

Ultrasonic Scaling

G: Scaling

P: Periodontal treatment

E: Endodontics irrigation

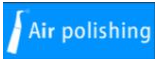

Air polishing

A : Air polishing

Pipe cleaning

Turn down water flow rate/power/air pressure

Turn up water flow rate/power/air pressure

Setting

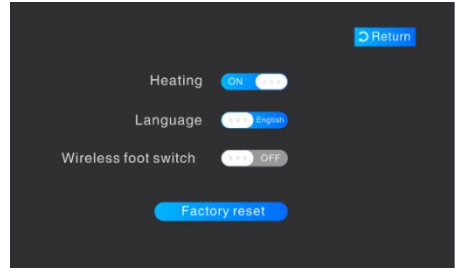

Figure 8 Setting interface

Heating: Turn on/off the heating function of air polishing system

Language: Chinese or English

Wireless Foot Switch: Wireless foot switch matching

Factory reset: Factory reset

2.5 Installation of tip, file, nozzle and handpiece

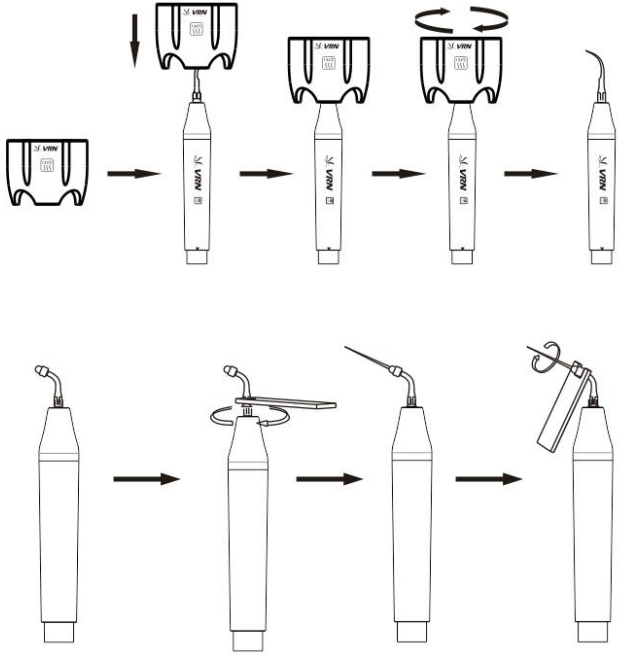

Figure 9

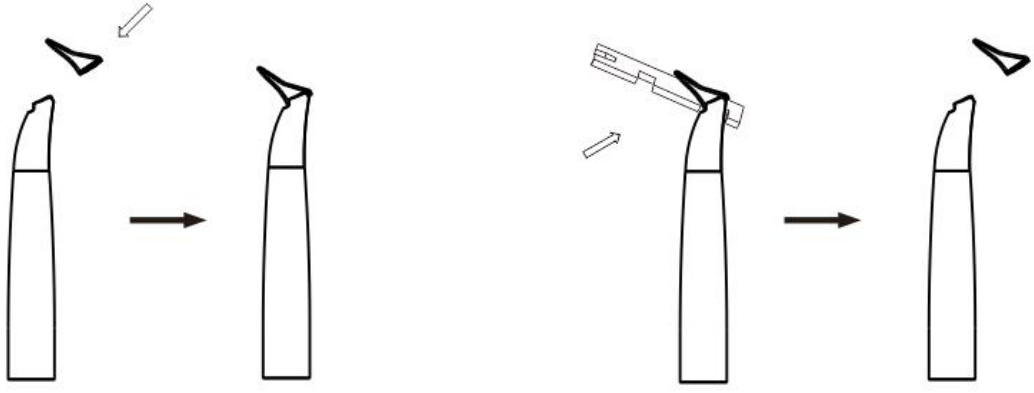

Figure 10

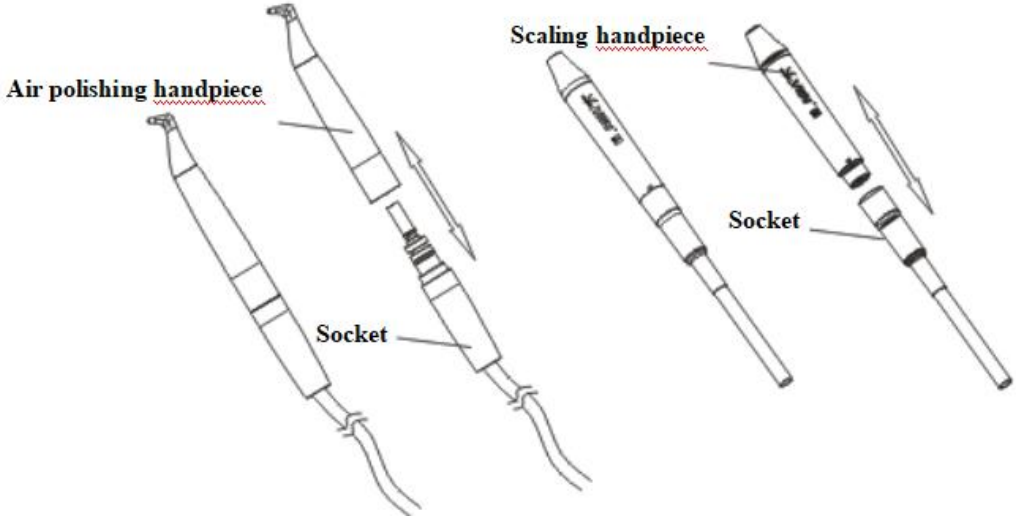

Figure 11

2.6 Wireless foot switch matching

a. Install the batteries to DQ-40 wireless foot switch

Take off the sticker, and stick the waterproof sticker on the bottom.

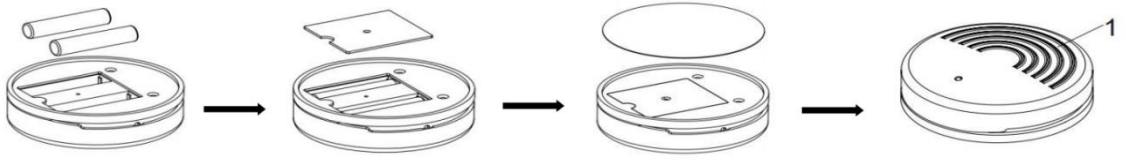

Button “1”, start the device

Figure 12

b. Install the batteries to DQ-80 wireless foot switch

Take off the sticker, and stick the waterproof sticker on the bottom.

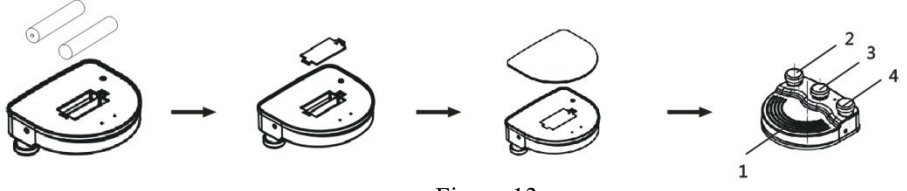

Figure 13

“1” --Turn on the device

“2” --Decrease the power of the device

“3” --Working mode selection

“4” --Increase the power of the device

c. DQ-40 wireless foot switch matching

1) In the power-on state, press and hold the "G", "P", "E" buttons at the same time until the water flow rate slider indicator starts to flash slowly；

2) Keep the foot switch pressed and put two AA batteries (operate when the water flow rate slider indicator starts to flash slowly) so that the foot switch enters the pairing state, the foot switch is pressed down for 3 seconds after power-on;

3) Release the foot switch and restart the device, then wireless foot switch can control the device;

4) Press and hold the three buttons of "G" "P" "E" at the same time when the power gear of the three modes of "G" "P" "E" is 12 gears, keep the foot switch pressed and remove the AA battery to undo matching.

d. DQ-80 wireless foot switch matching

1) In the power-on state: Main interface--Setting--Wireless foot switch-Turn on matching;

2) Keep the foot switch pressed and put two AA batteries, the foot switch is pressed down for 3 seconds after power-on;

3) Release the foot switch and restart the device, then wireless foot switch can control the device;

4) In the power-on state: Main interface--Setting--Wireless foot switch--Turn off matching, keep the foot switch pressed and remove the battery to cancel all matching.

Note: Press and hold the "G" "P" "E" buttons at the same time when gear of the water flow rate is 12, the main unit will enter the water flow rate calibration mode, do not enter this mode under normal circumstances, if necessary, please contact the dealer or manufacturer.

2.7 Air supply connection and power adapter connection

1) Insert pipe into the connector through nut.

2) Tighten the nut.

3) Insert the connector until hearing a click. Press the switch when separate it.

Note:Connection method is the same for the DQ-40 and DQ-80.

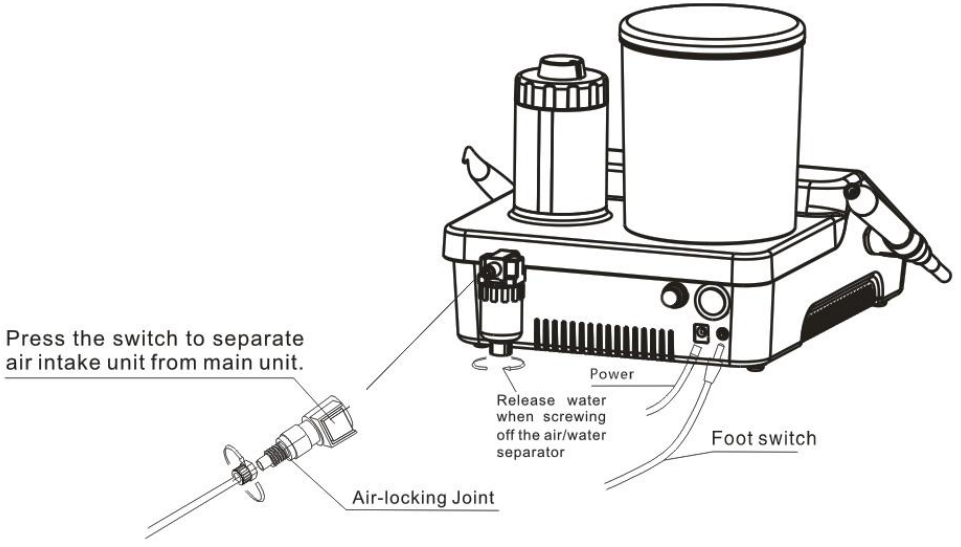
Press the switch to separate
air intake unit from main unit.
Power
Release water
when screwing
off the air/water
separator
Foot switch
Air-locking Joint

Figure 14

2.8 Setting the water/air/powder flow rate -DQ-40

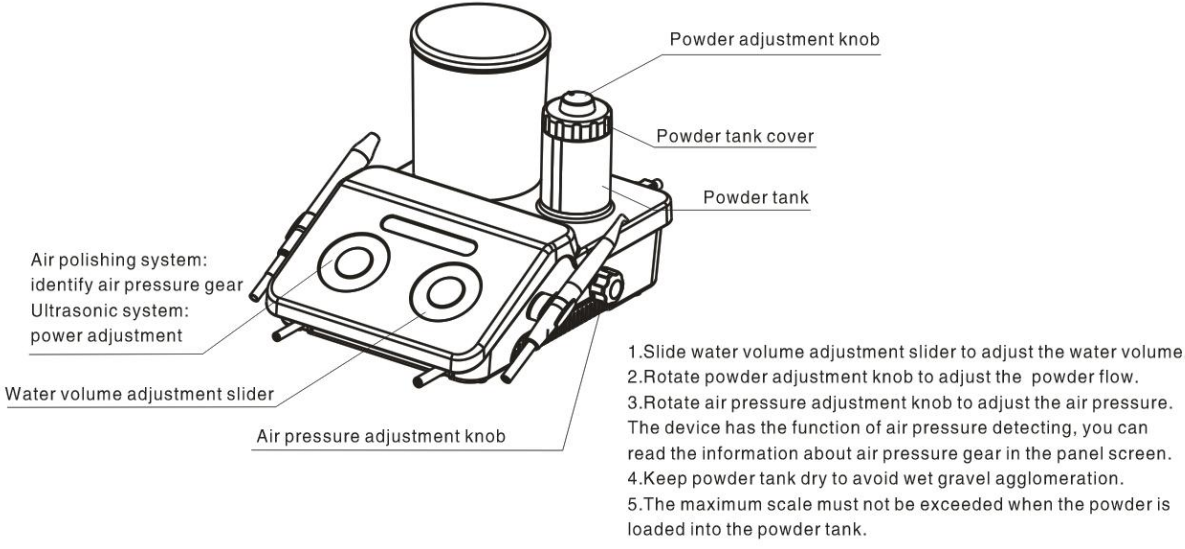

Figure 15

2.9 Setting the water/air/powder flow rate -DQ-80

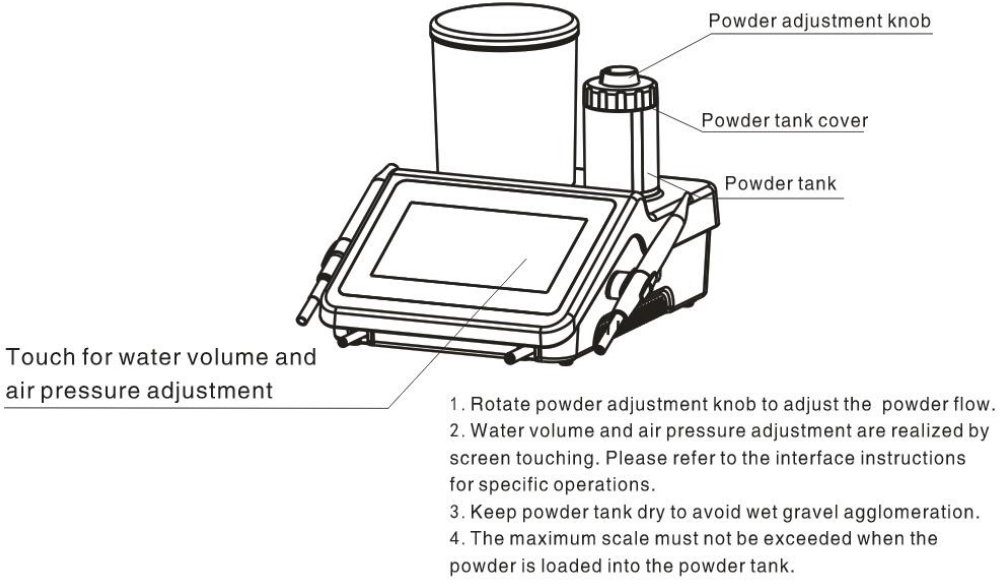

Figure 16

2.10 Product Installation Steps

1) Open the package, check whether all items of the device are complete according to the packing list, and place the main unit on a stable plane facing the operator.

2) Insert the external air pipe (black) connector into the air intake connector on the back of the main unit: press the snap ring first and then insert the air inlet connector as shown in Figure 14. Insert the powder chamber into the position of powder chamber above the main unit (Figure 15, Figure 16).

3) Fill a proper amount of water into the transparent water bottle, and insert the water bottle into the sink seat above the main unit (Figure 15, Figure 16).

4) Insert the wired foot switch plug into the wired foot switch socket; See Figure 12 and 13 for details of wireless foot switch.

5) Insert the scaling handpiece and air polishing handpiece into the corresponding handpiece tail wire, and place the scaling handpiece on the left bracket of the main unit, and place the air polishing handpiece on the right bracket.

6) Turn off the power switch on the main unit, then insert the output plug of the power adapter into the DC power supply socket on the back of the main unit, and insert the input plug of the power adapter into the～220V network power supply.

⚠ Warning:

1) The protective ground must be connected when the power adapter is connected to the network power.

2) Do not place or install the device in which is difficult to disconnect the network power when the power adapter is connected to the network power.

3. Product Functions and Operations

3.1 Ultrasonic System

3.1.1 Scaling mode and operation

1) Turn on the power switch on the main unit and pick up the scaling handpiece. At this time, the panel will automatically jump into the ultrasonic scaling working state. Click the "G" button on the panel to enter the scaling mode.

2) Screw the suitable tip as required on the handpiece with torque wrench.

3) Step on the foot switch 1, the tip vibrates and the LED at the head of the handpiece lights up, and the cooling water shoots out (it takes several seconds for water to come out at the first time after the device is switched on). After the foot switch is released, the vibration and the water flow stops, and the

LED light continues to light for 10 seconds and then goes out.

4) Generally, the handpiece is held in the pen holding position.

5) The frequency during the normal working state is extremely high. Ensure that the tip vibrates normally and water atomizes normally, only light touch by the side of tip and reciprocating movement at a certain speed can eliminate tartar, and the tip has no obvious feeling of heating. Do not exert too much force or stay too long in the local area when cleaning tooth.

6) Vibration intensity: adjust the vibration intensity as required, and adjust the vibration intensity at any time during the clinical process according to the patient’s sensitivity of teeth and the hardness of the calculus. Water flow rate: if the device is DQ-40, slide to adjust the water flow rate by touching water flow rate adjustment slider on the panel; if the device is DQ-80, adjust the water flow rate by pressing the "+" or "-" button on the touch panel. Step on the foot switch, and the tip will vibrate, adjust the water flow rate to form water mist to cool the tip and clean the tooth surface.

7) Please keep the side of the tip in contact with the tooth surface at zero angle during clinical scaling, let the tip vibrate freely without exerting pressure.

8) After finishing operation, keep the device working for 30 seconds on the water supply condition in order to clean the handpiece and the tip. Then remove the tip for sterilization.

3.1.2 Periodontal treatment mode and operation

1) Screw the tip tightly on the scaling handpiece by torque wrench. Click the "P" button on the panel to enter the periodontal treatment mode.

2) The other operation and adjustment methods are similar to the ultrasonic scaling mode.

3.1.3 Endodontics treatment mode and operation

1) Screw the file to the scaling handpiece by Endo wrench.

2) Click the "E" button on the panel to switch to endodontics treatment mode.

3) The default power is 1 gear after the device switch to endodontics treatment mode. Adjust the power according to the actual situation during clinical treatment.

4) Select a suitable file and slowly put it into the root canal of the patient's teeth. Step on “A” button of the foot switch to perform Endodontics irrigation or other endodontics treatment functions.

5) The file should not be compressed too tightly in the root canal during clinical scaling.

6) The file must be put into the root canal to activate the foot switch.

7) The power range of Endodontics irrigation is recommended to be between 1-5 gears.

3.1.4 Torque wrench operation (See Figure 9)

The Torque wrench can control the strength of the tip's installation properly and correctly. It also can guarantee the operator screw or unscrew the tip effectively and keep their hands away from being scratched.

Operation Steps:

1) Put the tip into the hole of the wrench and hold the handpiece tightly, and then rotate the tip in a clockwise direction till the tip does not turnround anymore, and then it is installed.

2) Unscrew the tip: hold the handpiece and rotate the tip in a counter-clockwise direction by wrench to remove it.

3) Once after using, please clean and sterilize the wrench.

⚠ Notes:

1) When fixing clamper, it must be tightened up.

2) The nut on the clamper must be tightened up.

3) Do not press it too much during irrigation for root canal.

4) Do not step on the foot switch until the tip is put in the root canal.

5) The power range of endodontics treatment is advised from the 1st to the appropriate grade.

6) Operators must be the trained doctors or technicians. It must do a good job of protection according to hospital requirements during treatment.

3.2 Air polishing system

1) Add an appropriate amount of powder into the powder chamber (the amount of powder added should be controlled between "Max" and "O" marked on the surface of the powder chamber), then tighten the cover of the powder chamber, and insert the powder chamber into the powder chamber seat directly above the main unit.

2) Pick up the air polishing handpiece, then the panel will automatically jump into air polishing mode.

3) If the device is DQ-40, adjust the air pressure knob by sliding the water flow rate adjustment slider (see Figure 15 for details). If the device is DQ-80, adjust the water flow rate by clicking the "+" or "-" button of water flow rate on the touch panel, adjust the air pressure by clicking the "+" or "-" button of

power. Align the nozzle with the pool, step on the “1” button of foot switch, then confirm that the nozzle can normally spray gas, sand powder and water mist before use.

4) Please wear goggles and gauze on the face shield for the patient before sandblasting treatment. Users should wear goggles or protective masks.

5) Generally, the handpiece is held in the pen holding position.

6) Adjust the water flow rate and air pressure to the appropriate gear. The recommended water flow rate and air pressure starts from 5 gears. Adjust the water flow rate and air pressure at any time during the clinical process according to the sensitivity of patients' teeth and dental plaque. Increasing the air pressure will enhance the cleaning effect, but will weaken the polishing effect; Increasing the amount of water will enhance the polishing effect, but will weaken the cleaning effect.

7) The nozzle shall be aligned with the tooth surface during scaling, but avoid to contact directly. The distance between the nozzle and the tooth surface shall be 3-5 mm, and the angle shall be 30° ~60° . The smaller the angle, the larger the cleaning area. Please conduct a small range of circular movement on the tooth surface during scaling.

8) Use the high-speed evacuation device on the dental comprehensive treatment machine to absorb the air/ powder mixture reflected from the tooth surface during treatment.

9) Adjust the water flow rate to the maximum gear and polish all tooth surfaces after treatment.

⚠ Notes:

1) Doctors should wear special goggles when air polishing, and the rest are protected according to hospital requirements.

2) Patient should be protected according to the requirements of the hospital when air polishing.

3.3 Cleaning Mode

It is recommended to flush and disinfect the pipeline of the device every day. The cleaning mode allows the pipeline to be cleaned and disinfected to reduce the accumulation of crystals and bacteria in the pipeline.

1) Put distilled water or demineralised water into the water bottle;

2) Pick up the scaling handpiece and aim at the pool. If the device is DQ-40, click the "C" button on the interface to start cleaning the pipeline; If the device is DQ-80, click the "Clean" button on the interface

to start cleaning the pipeline;

3) The device will automatically stop the cleaning mode after 60 seconds of cleaning. Click "G", "P", "E" (DQ-40) or "Cancel" (DQ-80) on the screen to stop cleaning in the cleaning mode;

4) Put the scaling handpiece back on the bracket after cleaning. Pick up the air polishing handpiece and aim the nozzle at the pool, click the "Clean" button again, and the device will automatically blow out the residual sand powder in the pipeline and release the high-pressure gas in the powder chamber.

5) The device will automatically exit the cleaning mode. In the cleaning mode after 15 seconds of cleaning, click "A" (DQ-40) or "Cancel" (DQ-80) on the panel to stop cleaning.

3.4 Setting -DQ-80

1) Click the "Setting" in the lower right corner of the screen to enter the "Setting" interface. See Figure 8 for details.

2) Select to turn on/off the heating function as required (the heating function is only effective for the air polishing mode, and the outlet water temperature varies according to the actual water flow rate).

3) The device supports "Chinese" and "English", select suitable language as required.

4) Please enable wireless foot switch pairing if you choose to use it. (It has been paired before leaving the factory and does not need to be set. If the wireless foot switch is replaced, see the wireless foot switch code pairing operation in section 2.6 for details).

5) Restore factory setting: All system parameters will be restored to the factory setting of the device after clicking "Restore factory setting".

3.5 Multifunctional foot switch-- DQ-80

Button	Working mode	Function	
		Ultrasonic System	Air polishing System
1	Start Working	Tip vibrate + water outlet	Air spray , powder+water outlet
2	Waterless Mode	Tip vibrate	Air spray
3	Enhancement mode（+1）	Power increased by 3 gears	Air pressure increased by 3 gears
4	Cleaning Mode	Water outlet	Air outlet+water outlet

Note:

1) The power/air pressure is increased by 3 gears from the original gear in the enhancement mode, up to

12 gears, and automatically returns to the previously set gear after releasing 3 button.

2) Do not pull out the handpiece when stepping on the foot switch and the device vibrates.

3) Please remove the battery if the wireless foot switch is not used for a long time.

3.6 Precautions

1) Keep the device clean before and after using.

2) Please let the device work for 10 seconds under the condition of water to remove the residual water in the pipe before each clinical operation.

3) Operators shall be equipped with adequate protection (such as goggles, masks, etc.) to prevent cross infection.

4) Read carefully the instructions furnished with the powder before using it.Specific utilisation of each powder are describe in the instruction for use delivered with the powders.

5) The use of the product must comply with the requirements of the relevant operating specifications and relevant laws and regulations of the medical department, and it is only used by trained doctors or technicians.

6) Please reprocess the handpiece, tips, wrench and other accessories before using.

7) Do not unscrew the tip when stepping on the foot switch or the handpiece vibrates.

8) Do not step on the foot switch when the tail line of the air polishing handpiece has been removed from the main unit.

9) Make sure that the tail plug of the air polishing handpiece is correctly placed on the handpiece bracket before using the scaling handpiece; Similarly, make sure that the scaling handpiece tail plug is correctly placed on the scaling handpiece bracket before using the air polishing handpiece.

10) The tips must be tightened.

11) If the tip is damaged or worn seriously, the vibration intensity will decrease. The operator should replace the tip timely according to the clinical situation. Use the attached wear comparison card of the tip for comparison. The tip of the corresponding model is worn beyond the green line, its power is basically unchanged. When the wear is between the green line and the red line, the power is as low as 80%. It is recommended to replace the tip if the power is low and wear to within the red line scale

12) Do not bend or grind the tip.

13) Prohibit pointing the nozzle of air polishing handpiece at people in any case.

14) It may cause eye damage if the sand powder is accidentally sprayed into the eyes. So, we strongly recommend that all personnel (including doctors, nurses and patients) wear goggles during the sandblasting treatment.

15) In the process of air polishing and scaling, please click on the "cleaning" mode first if you need to add powder to the powder chamber, remove the powder chamber from the device after the internal pressure of the powder chamber is released, and then add an appropriate amount of powder.

16) Before replacing the air polishing handpiece or nozzle, please use a three-way gun to dry the water at the interfaces of both ends (especially the air circuit interface) to prevent the water from entering the air circuit and prevent the powder from crystallizing in the pipeline and causing blockage.

17) Make sure that the air vent and water outlet are not blocked.

18) Check whether the gasket in the powder chamber cover is in good condition. Please replace and install the gasket in time if it is deformed or falls off.

19) Please rotate the powder chamber cover to the specified position to seal the powder chamber.

20) Please clean the connector of the water bottle before using.

21) When changing the liquid category of the water bottle after using, please adjust the water flow rate to the maximum and make it work in the automatic water supply mode for 30 seconds to keep the current liquid and liquid circuit clean.

22) Please replenish the liquid in time to keep the liquid circuit unblocked when the liquid in the water bottle is lower than the lower limit, . Do not use unclean water.

23) Please clean the powder chamber to remove the residual powder after using.

24) Do not pull the tail wire forcibly during the use of the device to avoid damage to it.

25) Do not knock or scratch the handpiece.

26) Turn off the power switch and unplug the power cord plug of the power adapter after using the device.

27) Our company specializes in the production of medical devices. We are responsible for its safety only when the maintenance, repair and modification of the device are carried out by our company or the dealer authorized by our company, the replaced accessories are our company's accessories and

operated according to the operation manual.

28) Please use the corresponding tip of our company. The internal thread of the tip produced by another manufacturers is rough, rusty, cracked or uses other standard threads, which are easy to be damaged and slip when used in combination with the external thread of the handpiece, so as to cause irreparable damage to the ultrasonic periodontal therapy device.

29) MR UNSAFE: the device cannot be used in MRI environment.

4. Reprocessing

The instructions provides instructions for cleaning, sterilization and packaging of Ultrasonic Scaler intended to be reprocessed in medical facilities.Reprocessing components include tip,wrench and handpiece.

The goal of reprocessing reusable products is to reduce bioburden and to achieve sterility of those products in order to eliminate the risk of product reuse related infection.Decisions regarding cleaning or sterilizing dental instruments are based on the potential risk of infection associated with their use.

It is recommended to use steam sterilization. Remember that sterilization cannot be achieved unless the elements of the assembly are cleaned first.

If there is anything in the following instructions that is not clear, do not hesitate to contact.

We encourage you to report adverse events related to device reprocessing. Report such events directly to URIT Medical Electronic Co., Ltd.

4.1 Reprocessing instructions for reusable products

The instructions are binding for the reprocessing of Ultrasonic Scaler. When necessary, additional product-specific instructions are included with the product to provide additional information.

Before use, carefully read the operating instructions of Ultrasonic Scaler and devices with which the product will be used.Reusable products must be cleaned and sterilized prior to first use. They must be replaced after the number of operations specified by the manufacturer. Disposable products (single use) cannot be reused.

4.2 Preparation

It is only possible to carry out effective sterilization after the completion of effective cleaning. Please ensure that, as part of your responsibility for the sterility of products during use, only sufficiently validated equipment and product-specific procedures are used for cleaning and sterilization, and that the validated parameters are adhered to during every cycle.Please also observe the applicable legal requirements in your country as well as the hygiene regulations of the hospital or clinic.

4.3 Initial treatment at the point of use

The treatment must be carried out immediately, no later than 30 minutes after the completion of the operation. Additional information, where necessary, is provided in the respective product-specific usage instructions.

Steps

1) Completely disassemble the tips and handpiece from Ultrasonic Scaler, if applicable. Rinse away any surface soiling of them with distilled deionized water or cleaning agent.
2) Rinse through all lumina (e.g. irrigation and aspiration connection) at least 3 times in the normal direction of flow (no back rinsing) using a disposable syringe (min. volume 50 ml) filled with distilled/deionized water applied to the back nozzle.
3) An aldehyde-free cleaning and disinfection solution that is compatible with the products may also be used as an alternative rinsing solution. In such cases, it is necessary to rinse thoroughly afterwards at least 3 times with distilled, or deionized water.

4.4 Cleaning

Preparation

When selecting the cleaning agent to be used, ensure that:

•These are fundamentally suitable for the cleaning of the products and compatible with one another,

• The chemicals used are compatible with the products.

⚠ It is absolutely essential that the concentrations and contact times specified by the manufacturer of the cleaning agent are adhered to. Only freshly prepared solutions may be used. The solution is not permitted to foam.Only sterilized or low microbe count distilled/deionized water (< 10 cfu/ml) can be used for all rinsing steps.

Steps for manual cleaning

1) Completely disassemble the handpiece and instruments, if applicable.
2) Place the products in 75% ethyl alcohol for at least 3mins.
3) Remove any externally-attached soiling by brushing carefully with a soft brush or a soft cloth for at least 3 mins.
4) Rinse the products vigorously at least five times, each time with fresh distilled or deionized water (each product lunmen with at least 50 ml of water). Repeat the cleaning process if the last rinsing does not run clear, or if stains are still visible on the product.

⚠ The product adopts manual cleaning and it has been verified. Please do not modify the cleaning method without authorization, such as using disinfector for automated cleaned.

Notice: No automatic cleaning for the product.

4.5 Drying

After cleaning, put the handpiece, wrench and tips into the oven for drying.The recommended drying condition is 138℃ for 20 minutes.

4.6 Inspection and maintenance

⚠ If stains are still visible on the product after cleaning, the entire cleaning procedure must be repeated. Products with visible damage, chip/flake loss, corrosion or bent out of shape must be disposed of (no further use is permissible).

4.7 Packaging

Only cleaned products are permitted to be sterilized. Prior to sterilization, the products need to be placed in a suitable

sterilization container:

- Resistant to 138℃, with adequate steam permeability,
- Maintained on a regular basis.

If single-use sterilization packaging is to be used, this must be suitable for steam sterilization (temperature resistant to 138℃ with adequate steam permeability).The material of sterilization packaging is made of medical paper and PET/CPP. The packaging material complies with the requirements of EN ISO 11607-1.

Steps

1) Select a suitable sterilization packaging according to the size of the sterilized item and put the items in.
2) Place the sharp and specially shaped devices in the correct position for safe removal when opened.
3) Affix the strip of sterilization packaging(the strip of the packaging is sticky and it does not require additional processing for sealing such as heat sealing) and mark the sterilization time.
4) Put the sealed sterilization packaging rightly into steam sterilizer.
5) Pay attention to the color-changing: if sterilization is really implemented, it will turn black /grey from initial blue under steam sterilization.
6) Open the strip along the direction printed on the packaging and then takes the items out.

4.8 Sterilization

The handpiece and tips can withstand 250 reprocessing cycles.Do not exceed the maximum number of reprocessing cycles.

Use only the following listed steam sterilization procedures for sterilization; other sterilization procedures are not permissible:

- Steam sterilizer in accordance with EN 13060 validated in compliance with EN IS0 17665,
- Maximum sterilization temperature 138℃.

Steps for sterilization

1.Sterilization at 134℃ for 4 minutes.

2.Sterilization at 134℃ for a maximum of 20 minutes is permissible.

The hot-air sterilization and radio-sterilization procedure may not be used (as it causes the destruction of products). The manufacturer assumes no responsibility for the use of other sterilization procedures (e.g. ethylene oxide, formaldehyde and low temperature plasma sterilization).

4.9 Service life

The handpiece and tips have been designed for 250 reprocessing cycles.Ultrasonic Scaler has 10 years service life and tips have 5 years service life from start with production, if it exceeds reprocessing cycles or service life, it should be not used any more. The materials used in their manufacture were selected accordingly. However with every renewed preparation for use, thermal and chemical stresses will result in ageing of the products.The use of ultrasound baths and strong cleaning and disinfection fluids (alkaling pH > 9 or acid pH < 5) can reduce the life span of products. The manufacturer accepts no liability in such cases. The products may not be exposed to temperatures above 138℃.

4.10 Storage and transportation

After sterilization, keep sterilization packaging and stored it in the following environment to avoid infection and sterilization failure:

• Temperature:-20~55 ℃,

• Humidity:10%-90%,

• Atmospheric pressure:70kPa~106 kPa.

The product can keep sterile for 6 months in sterilization packaging, when exceed the 6 months， it shall be reprocessed again before use.

⚠ After reprocessing, it is necessary to confirm that the products can work normally before use. If products with visible damage, chip/flake loss, corrosion, rust or bent out of shape must be disposed of (no further use is permissible).

5. Troubleshooting

5.1 Troubleshooting table

Fault	Possible cause	Solutions
The device can not run	The power cord is not plugged in properly	Check the power plug
	The fuse in the power supply is broken	Replace the fuse (Replace the T1AL 250 V under the guidance of the manufacturer's designated person)

	The battery of foot switch battery is drained	Replace the battery
	The foot switch fails	Refer to the wireless foot switch code pairing method in section 2.6 to re-code the code
	Poor connection of foot switch (wired)	Plug in the foot switch
No ultrasonic vibration	The tip hasn't been screwed on to the handpiece tightly	Screw the tip on the handpiece tightly by wrench
	The tail wire is loose from the board connector	Contact local dealer or our company
	Handpiece failure	Pull out handpiece and contact us or anthorized dealers
	Tail wire failure	Contact local dealer or our company
The tip vibrates but does not atomize	The amount of water flow rate is too little	Adjust the water flow rate to a higher grade

	The power is too little	Turn up the power
The handpiece still comes out of water after the power is turned off	Electromagnetic valve failure	Contact local dealer or our company
Heating handpiece	The amount of water flow rate is too little	Adjust the water flow rate to a higher grade
Heating handpiece seriously	Handpiece failure	Pull out handpiece and contact local dealer or our company
The amount of water flow rate is too little	The amount of water flow rate is too little	Adjust the water flow rate to a higher grade
	Waterways are blocked	Unblock waterways with three-purpose guns
The tip vibrates weakly	The tip is loose	Screw the tip tightly
	The connection between the handpiece and the tail wire socket is not dry	Dry the connection between the handpiece and the tail wire with hot air

	Excessive wear of the tip [Note 1]	Replace the tip
Water seeps from the connection between the handpiece and the tail wire socket	The waterproof O-ring is damaged	Replace the waterproof O-ring
File can not vibrate	Loose Clamping nut is loose	Screw the nut tightly
	The root canal clamp holder is damaged	Replace the root canal clamp holder
Leakage of liquids/gases under the device	The inner tube is broken	Contact local dealer or our company
Air polishing without powder, air or water	No air or water	Contact local dealer or our company

	The handpiece or nozzle is clogged	Pull out the handpiece and check the sandblasting tail wire for air or sand spray. If sand powder, air and water can be sprayed, please use a steel wire to unclog the handpiece and put it in a washing machine for cleaning.
No powder and water, but air spray	No powder	Check if there is too much or too little powder in the powder chamber
	No water	Check if there is water in the water bottle
	The powder is damp	Empty and dry the powder chamber, then refill it with dry powder

Note: Please contact local dealer or our company if the fault is still not resolved.

5.2 Annotation

[Note 1]

In the case of ensuring that the tip has been tightened and has been sprayed with water mist, the tip is deemed to have been damaged by the following phenomena:

1) The vibrating strength and water atomization degree of the tip are obviously weakened.

2) Abnormal noise of "buzzing" is sound when the tip works.

5.3 Maintenance of air polishing System

1) Touch the gear adjustment button to make the device automatically activate the air path cleaning for 5 seconds after each use of air polishing.

2) Pay attention to the gas-water separation valve behind the device before use, rotate the knob at the bottom of the gas-water separation valve to drain the liquid inside if there is liquid inside it.(See figure 14)

6. Storage, Maintenance, Transportation

6.1 Storage and Maintenance

1) The product should be handled carefully and lightly. Be sure that it is far from the vibration, and installed or kept in a cool, dry and ventilated place.

2) Do not store the product together with the combustible, poisonous , caustic or explosive goods.

3) In case the product is not used for a long time, it should be electrified once a month, and each time lasts for 5 minutes and clean the powder pipeline.

4) The product shall be stored at the location as follow:

   ① Temperature: -20℃ ～ 55℃,

   ② Relative humidity: ≤ 90%,

   ③ Atmospheric pressure: 70 kPa ～ 106 kPa.

6.2 Transportation

1) During transportation, it shall not be packed with dangerous goods.

2) During transportation, excessive shock and vibration shall be prevented, and carefully place, do not place it upside down.

3) Protect the product from direct sunlight, rain, or snow during transportation.

6.3 Gas/water Separation

1) Open the knob at the bottom of the filter counterclockwise to let the stagnant water drain when there is stagnant water in the filter, then tighten the knob clockwise.

2) Replace the filter element: use the filter wrench to unscrew the transparent shell of the air filter, and then use the wrench to continue to unscrew the black nut at the lower end of the filter element. Take out the white filter element and discard it to the trash can, replace a new filter element, and reinstall the black nut and transparent shell. It is recommended to replace the filter every 24 months. Spare filter elements are included in the included accessories.

7. Product list

No.	**Name**	Replacement cycle	Replacement Method
1	Main unit	/	/
2	Scaling handpiece	250 reprocessing cycle	See article 2.5

3	Air polishing handpiece	250 reprocessing cycle	See article 2.5
4	Tips	250 reprocessing cycle/5 years/abrasion	See article 2.5
5	Torque wrench	250 reprocessing cycle	Replace new one
6	Endo wrench	250 reprocessing cycle	Replace new one
7	Endo file	250 reprocessing cycle	See article 2.5
8	Connector of liquid circuit	/	/
9	Sterilization box	/	/
10	Power supply cord	/	/
11	Water bottle	/	/
12	Wireless foot switch	/	/
13	Wired foot switch	/	/
14	Main software	/	/

15	Two-way and three-way adapter	/	/

⚠ **Note: There doesn't exhaustively list the accessories and specifications of DQ-40/DQ-80 Please refer to the random delivery materials and packing list for details.Should your product need serviced and repairs,please send it to your dealer or to an authorized repair center.We decline responsibility for the safety of the device and declare the warranty null and void if service or repair is carried out by an unauthorized third party or if non-genuine spare parts are used.**

8. Warranty

Since the date of sale, the warranty of this product is effective with its warranty card, and we are responsible for life-long maintenance. The product cannot be disassembled privately. If necessary, please disassemble and repair it under the authorization of the company. The repair is limited to the replacement of the tail line, main board, and water pump.

For the non-repairable damage caused by the maintenance of any non-designated and dedicated maintenance personnel is not covered by the free warranty.

9. Symbols

VRN	Manufacturer's logo		Caution!		Class II Equipment		Type B applied part		Do not dispose of the product into the ordinary municipal waste or garbage system
134°C	Sterilizable at up to 134°C in the steam sterilizer (autoclave) attemperature specified		Manufacturer		Refer to instruction manual/ booklet	SN	Serial number		Keep dry
	Temperature limit		Atmospheric pressure limitation		Fragile, handle with care	%	Humidity limitation		Date of manufactu re

	Use-by date		This way up	Gas 0.5Mpa-0.6Mpa	Air supply pressure is (0.5~0.6) Mpa		Foot switch		Fuse
	"OFF" (power)		"ON" (power)	Liquid	Water flow rate setting	Power	Power setting	IPX1	Degree of protection against ingress of water
	Do not roll	3	Stacking limit by number	+ AA −	AA battery	- +	Electrical outlet	A	Air polishing Mode
Min	Minimum power	Max	Maximum power	G	Scaling Mode	P	Periodontal Mode	E	Endodontic Mode
	For indoor use only	C Clean	Cleaning Mode	MD	Medical device	CE 0123	The symbol indicates that the device complies with the EU	UDI	Unique device identifier

▲	Coupling identification	EC REP	Authorized representative in the European Community/European Union

10. Product disposal

No.	Components	Disassemble methods	Dispose methods
1	Printed-wiring boards	Use a Phillips screwdriver to remove the fixing screw, unplug the cable, and remove the items.	Recycle as metals and metal compounds. Please put them to the waste sorting recycling bin of metals.
2	Transformer		
3	Pump		1.For metals and metal compounds, please put them to the waste sorting recycling bin of metals. 2.For nonmetal, please put them to the waste sorting recycling bin of organic
4	Solenoid valve		

			substances which are not used as solvents,which can be used for composting and other biological transformation processes.
5	Handpiece cord		Please put them to the waste sorting recycling bin of organic substances which are not used as solvents,which can be used for composting and other biological transformation processes.
6	Enclosure		
7	PU tube	Remove the PU tube with nipper pliers.	
8	Water bottle	Remove from the main unit.	
9	Tips	Refer to the fig.9 in the manual.	Please dispose it in the infectious clinical waste containers.
10	Foot switch	/	1.For metals and metal compounds, please put them to the waste sorting recycling bin
11	Handpiece	Remove from the handpiece cord.	

			of metals. 2.For nonmetal, please put them to the waste sorting recycling bin of organic substances which are not used as solvents,which can be used for composting and other biological transformation processes.

⚠ **Note:**

(1) Electrical waste products should not be disposed of with household waste.

(2) Please recycle where facilities exist. Check with your local authority or retailer for recycling advice if you are unclear.

(3) Powder shall be disposed and destroyed according to relevant local regulations after expiration, and shall not be discarded in drainage ditches or rivers or mixed with household garbage.

11. Manufacturer's rights

We reserves the right to modify the design, technology, accessories, description and packing list of the products without

prior notice at any time. In case of any difference, the actual product shall prevail.

12. Electromagnetic compatibility(EMC)

⚠ **Warning:**

The ME EQUIPMENT or ME SYSTEM is suitable for hospital or professional dental clinic environment.

(1) **Warning**：Don't near active HF surgical equipment and the RF shielded room of an ME system for magnetic resonance imaging, where the intensity of EM disturbances is high.

(2) **Warning**： Use of this equipment adjacent to or stacked with other equipment should be avoided because it could result in improper operation. If such use is necessary, this equipment and the other equipment should be observed to verify that they are operating normally.

(3) **Warning:** Use of accessories, transducers and cables other than those specified or provided by the manufacturer of this equipment could result in increased electromagnetic emissions or decreased electromagnetic immunity of this equipment and result in improper operation."

(4) **Warning**：Portable RF communications equipment (including peripherals such as antenna cables and external antennas) should be used no closer than 30 cm (12 inches) to any part of the equipment, including cables specified by the manufacturer. Otherwise, degradation of the performance of this equipment could result.

12.1 Requirements for cable installation

Cable name	Cable type	Cable length
Power input cable	Unshielded parallel cables	2 m
Input cable of foot switch	Unshielded parallel cables	2.5 m
Handpiece cable	Unshielded parallel cables	2 m

12.2 Key components of electromagnetic compatibility (EMC)

The key components of electromagnetic compatibility of the product are the main-board chip, touch-panel chip, transformer, and diaphragm pump, in the case of using or replacing non-original accessories, cables and transducers, it may result in obvious decrease of emission and immunity of the electromagnetic compatibility. Do not replace machine parts at random.

12.3 Guidance and manufacturer’s declaration - electromagnetic emissions

DQ-40/DQ-80 are intended for use in the electromagnetic environment specified below. The customer or the user should assure that it is used in such an environment.

1) It is suitable for used in domestic establishment directly connected to a low voltage power supply network which supplies buildings used for domestic purpose.

2) Floors should be wood, concrete or ceramic tile. If floors are cover with synthetic material, the relative humidity should be at least 30% .

3) Main power quality should be that of a typical commercial or hospital environment.If the user requires continued operation during power mains interruptions, it is recommended that it be powered for an uninterrupted power supply or a battery.

12.4 Guidance and manufacturer’s declaration -electromagnetic emissions and Immunity

Table 1

Guidance and manufacturer’s declaration - electromagnetic emissions	
Emissions test	Compliance
RF emissions CISPR 11	Group 1
RF emissions	Class B

CISPR 11	
Harmonic emissions IEC 61000-3-2	Class A
Voltage fluctuations/ flicker emissions IEC 61000-3-3	Comply

12.5 Guidance and manufacturer’s declaration-electromagnetic Immunity

Table 2

Guidance and manufacturer’s declaration - electromagnetic Immunity		
Immunity Test	**IEC 60601-1-2** **Test level**	**Compliance level**
Electrostatic discharge (ESD) IEC 61000-4-2	±8 kV contact ±2 kV, ±4 kV, ±8 kV, ±15 kV air	±8 kV contact ±2 kV, ±4 kV, ±8 kV, ±15 kV air

Electrical fast transient/burst IEC 61000-4-4	±2 kV for power supply lines 100 kHz repetition frequency	±2 kV for power supply lines 100 kHz repetition frequency
Surge IEC 61000-4-5	±0.5 kV, ±1 kV differential mode	±0.5 kV, ±1 kV differential mode
Voltage dips, short interruptions and voltage variations on power supply input lines IEC 61000-4-11	0 % UT; 0,5 cycle. At 0°, 45°, 90°, 135°, 180°, 225°, 270° and 315°. 0 % UT; 1 cycle and 70 % UT; 25/30 cycles; Single phase: at 0°. 0 % UT; 250/300 cycle	0 % UT; 0,5 cycle. At 0°, 45°, 90°, 135°, 180°, 225°, 270° and 315°. 0 % UT; 1 cycle and 70 % UT; 25/30 cycles; Single phase: at 0°. 0 % UT; 250/300 cycle
Power frequency magnetic field IEC 61000-4-8	30 A/m 50Hz/60Hz	30 A/m 50Hz/60Hz

Conducted RF IEC61000-4-6	3V,and 6V in ISM band and Amateur radio band 0.15 MHz – 80MHz 80 % AM at 1KHz	3V,and 6V in ISM band and Amateur radio band 0.15 MHz – 80MHz 80 % AM at 1KHz
Radiated RF IEC61000-4-3	10 V/m 80 MHz – 2,7 GHz 80 % AM at 1KHz	10 V/m 80 MHz – 2,7 GHz 80 % AM at 1KHz
NOTE UT is the a.c. mians voltage prior to application of the test level.		

Table 3

Guidance and manufacturer's declaration - electromagnetic Immunity						
Radiated RF IEC61000-4-3 (Testspecifications for ENCLOSURE PORT IMMUNITY to RF wireless communication	Test Frequency (MHz)	Band (MHz)	Service	Modulation	IEC 60601-1-2 Test Level (V/m)	Compliance level (V/m)
	385	380 –390	TETRA 400	Pulse modulation 18 Hz	27	27
	450	430 –470	GMRS 460, FRS 460	FM ± 5 kHz deviation	28	28

s equipment)				1 kHz sine		
	710	704 – 787	LTE Band 13, 17	Pulse modulation 217 Hz	9	9
	745					
	780					
	810	800 – 960	GSM 800/900, TETRA 800, iDEN 820, CDMA 850, LTE Band 5	Pulse modulation 18 Hz	28	28
	870					
	930					
	1720	1 700 – 1 990	GSM 1800; CDMA 1900;	Pulse modulation	28	28
	1845					

	1970		GSM 1900; DECT; LTE Band 1, 3, 4, 25; UMTS	217 Hz		
	2450	2 400 – 2 570	Bluetooth, WLAN, 802.11 b/g/n, RFID 2450, LTE Band 7	Pulse modulation 217 Hz	28	28
	5240	5 100 – 5 800	WLAN 802.11 a/n	Pulse modulation 217 Hz	9	9
	5500					
	5785					

Table 4

Guidance and manufacturer's declaration - electromagnetic Immunity				
Radiated RF IEC61000-4-39 (Test specifications for ENCLOSURE PORT IMMUNITY to proximity magnetic fields)	**Test Frequency**	**Modulation**	**IEC 60601-1-2 Test Level** (A/m)	**Compliance level** (A/m)
	30 kHz	CW	8	8
	134,2 kHz	Pulse modulation 2.1 kHz	65	65
	13,56 MHz	Pulse modulation 50 kHz	7,5	7,5

13. Attachment

13.1 Power table of ultrasonic scaler tips

Supragingival scaling		
Model	Grade	Water flow rate
G1	1-12(G)	Yes
G5	1-12(G)	Yes

Subgingival scaling		
Model	Grade	Water flow rate
P1	1-12(P)	Yes
P11	1-12(P)	Yes
P12	1-12(P)	Yes
P12L	1-12(P)	Yes
P12R	1-12(P)	Yes
P16	1-12(P)	Yes
IM1	1-12(P)	Yes

Endodontics irrigation		
Model	Grade	Water flow rate
E1	1-5(E)	Yes

13.2 Attached figure: Electrical schematic diagram

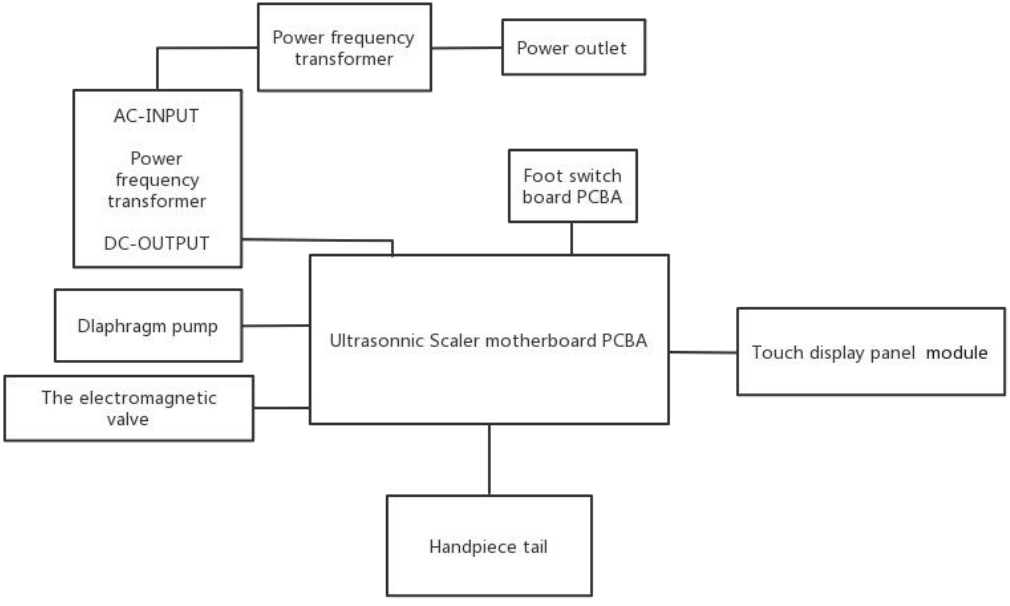

13.3 Compatible ultrasonic scaler tips

The Ultrasonic Scaler Tips manufactured by URIT Medical Electronic Co., Ltd. compatible with the DQ-40/DQ-80 Ultrasonic Scaler. See the table below for model details:

No.	Model	Material	Thread	Thread length	Tooth pitch	Function
1.	G1	1Cr17Ni2 stainless steel	M3 standard thread	5±0.5mm	0.5mm	For supragingival scaling
2.	G2					
3.	P2L					For periodontal treatment
4.	P2R					
5.	P4					
6.	P13L					
7.	P13R					
8.	P15					
9.	G3	30Cr13 stainless steel	M3 standard thread	5±0.5mm	0.5mm	For supragingival scaling
10.	G4					
11.	G5					
12.	P3					For periodontal treatment

13.	P1					
14.	E1					For root canal therapy
15.	E14					
16.	E15					
17.	P11	TC4 titanium alloy	M3 standard thread	5±0.5mm	0.5mm	For periodontal treatment
18.	P12					
19.	P12L					
20.	P12R					
21.	P16					
22.	IM1					For implant maintenance

⚠Warning:The internal thread of the ultrasonic scaler tips produced by some manufacturers is rough, rusty, cracked or subject to other standards. If the external thread of handpiece is used in combination with the ultrasonic scaler tips that have aforesaid defects, it is easy to damage the thread, result in the loose thread, even cause irreparable damage to the ultrasonic scaler, please use the VRN original ultrasonic scaler tips.

13.4 Compatible Prophylaxis Powder

The Prophylaxis Powder manufactured by Guilin Veirun Medical Technology Co., Ltd. compatible with the DQ-40/DQ-80 Ultrasonic Scaler. See the table below for model details:

No.	Model	Specifications	Main component	Function
1.	Classic	130g/bottle,260g/bottle	Sodium bicarbonate	For supragingival treatment
2.	UKC-S2	160g/bottle,220g/bottle	Erythritol	For supragingival/ subgingival treatment
3.	UKG-S3	160g/bottle,220g/bottle	Glycine	For supragingival/ subgingival treatment

⚠ Warning:

The powder provided by VRN are specially designed for use with the unit.Do not use powders from other manufacturers as this could damage the unit or could adversely affect its efficiency, please use the VRN original prophylaxis powders.

1.Product Name:Prophylaxis Powder

2.Product Model:Classic、UKC-S2、UKG-S3

3.Manufacturer Name:Guilin Veirun Medical Technology Co.,Ltd.

Address: No. D-07 Information Industry District, High-Tech Zone, 541004 Guilin, Guangxi, PEOPLE'S REPUBLIC OF CHINA

4.Contraindications:

• Under any circumstances, patients or users with chronic bronchitis or asthma should not use pneumatic polishing equipment for treatment, otherwise the exhaled gas and tooth powder may cause breathing difficulties for the patients or users.

• People with allergies may be allergic to dental sandblasting powder. If an allergic reaction is observed,please stop using this product and completely remove the dental powder from the mouth immediately.

• Periodontal bag treatment may lead to bacterial infection. For patients at the following risk conditions (endocarditis, pregnant women, breast feeding, contact infectious diseases), immune deficiency (neutropenia, granulocytopenia, diabetes, hemophilia), and patients undergoing treatment (radiotherapy, chemotherapy, antibiotic treatment), please take appropriate protective measures.

• Do not aim the nozzle of the sand blasters at dental fillings, crowns or dentures, as this may cause damage to these restorations.

• Patients with severe periodontal disease are advised to eliminate the inflammation before sandblasting treatment.

5.Scope of application:Used in the oral cavity to grind and polish tooth tissue or prostheses to make their surfaces smooth and uniform. This product is not sterile.

6.Safety data sheet:please refer to File No.: VRN-SDS-001 for detail.

7.Storage conditions: temperature: - 10 ℃ to 40 ℃, relative humidity: 10% to 95%, sealed storage.

8.Shelf-life:Expiry date for bottle opening: After bottle opening, the bottle cap needs to be tightly closed, and the expiration date for bottle opening under specified storage conditions is 3 months.

Note:

•Patients on a low salt diet must not be treated with the powder containing sodium bicarbonate. For patients on a law salt diet use the powder without sodium bicarbonate provided by VRN.

•The powder containing sodium bicarbonate provided by VRN can be used only for supra-gingival application. For sub-gingival application, please use the specific powder provided by VRN and refer to its operation instructions.

•Never use an abrasive powder i.e. alumina based. This would damage the unit.